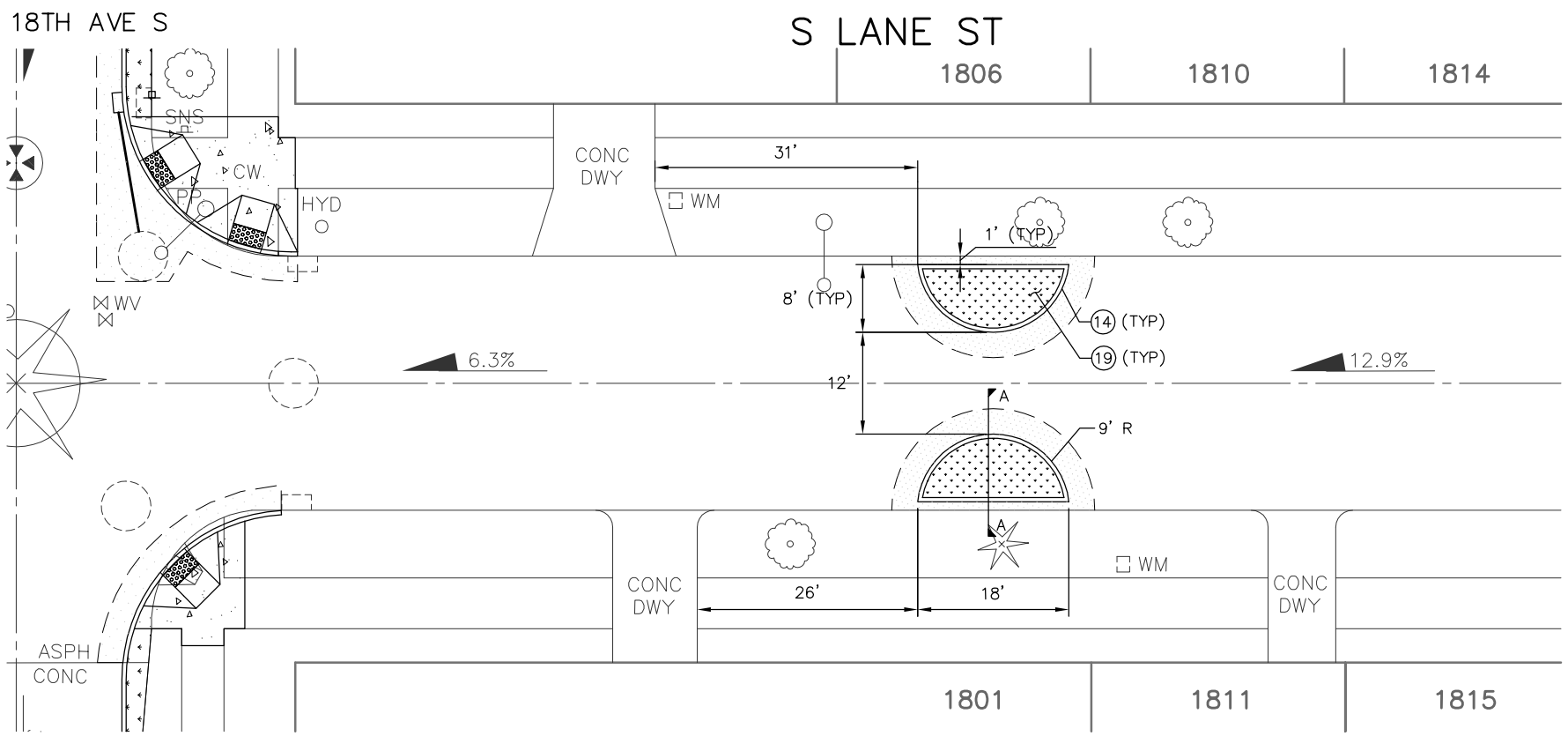

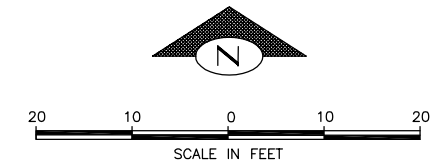

GENERAL NOTES:

1. ROADWAY RESTORATION PER SDOT SIDEWALK AND PAVEMENT OPENING AND RESTORATION RULE.
2. BASE MAP INFORMATION OBTAINED FROM FIELD MEASUREMENTS, NOT FROM A TOPOGRAPHIC SURVEY.
3. VERIFY LAYOUT PRIOR TO CONSTRUCTION. NOTIFY ENGINEER OF DISCREPANCIES.

CONSTRUCTION NOTES:

1. REMOVE EX TREE AND REPLACE (SPECIES TBD).
2. REMOVE EX CURB TO NEAREST JOINT.
3. PRESERVE AND PROTECT EX UTILITY POLE.
4. REMOVE EX DRIVEWAY AND REPLACE PER COS STD PLAN 430A.
5. ADJUST EX UTILITY TO FINISHED GRADE.
6. REMOVE AND REPLACE CEM. CONC. SIDEWALK PER COS STD PLAN 420.
7. REMOVE EX PCC SLAB IN PROPOSED LANDSCAPING AREA.
8. INSTALL 6" OF TOPSOIL AND HYDROSEED.
9. INSTALL ADA RAMP PER COS STD PLAN 422A.
10. PRESERVE AND PROTECT EX TREE.
11. PRESERVE AND PROTECT EX FIRE HYDRANT.
12. INSTALL TYPE 250B INLET. PROVIDE 8" PSD SLOPED AT 5% MIN. CONNECT TO EX CB.
13. PRESERVE AND PROTECT EX INLET.
14. INSTALL CEM. CONC. CURB PER COS STD PLAN 410C.
15. PRESERVE AND PROTECT EX UTILITY.
16. INSTALL NEW TREE (SPECIES TBD). NEW TREE LOCATION TO BE FIELD VERIFIED AT TIME OF CONSTRUCTION.
17. EXTEND CEM. CONC. SIDEWALK TO STREET.
18. REMOVE AND RESET EX SIGN.
19. INSTALL 6" OF TOPSOIL. FUTURE LANDSCAPING BY SDOT

100% DESIGN

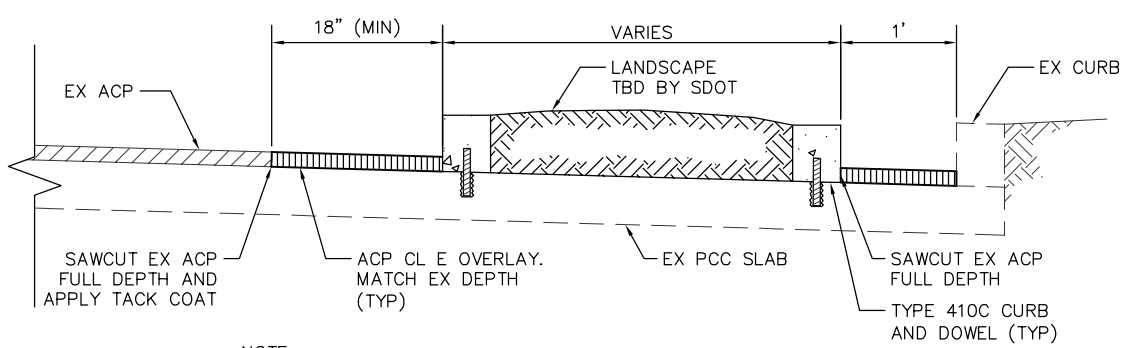

NOTE:
GRIND AND REMOVE EX ACP FULL DEPTH

SOUTH LANE STREET TYPICAL SECTION A–A

NTS

CALL 48 HOURS BEFORE YOU DIG!
1-800-424-5555

T2
S LANE ST
TRAFFIC CALMIMG

BRIDGING the GAP
Your Transportation Levy Dollars at Work

VAULT SERIAL NO. #35124

MARK	DATE MADE	CHK'D	REV'D	DESCRIPTION

REVISIONS

springline design LLC
Civil Engineering | Site Development | Transportation
3131 Western Avenue, Suite 501
Seattle, WA 98121
ph 206 957 8311
fax 206 957 8313

APPROVED FOR ADVERTISING
XXXXXXXXXXXXXXXXX
DEPARTMENT OF EXECUTIVE ADMINISTRATION
SEATTLE, WASHINGTON . . . . . 20 . . .
BY: . . . . . .
DIRECTOR, CONTRACTING SERVICES

NAME OR INITIALS AND DATE		
DESIGNED	EFE, JST	9/08
CHECKED	CEM	9/08
DRAWN	NJP	9/08
CHECKED	EFE, CEM	9/08

INITIALS AND DATE
REVIEWED:
DES. . . . . SPU CONST. . . . .
SDOT. . . . . PROJ. MGR. . . . .
RECEIVED . . . . . .
REVISED AS BUILT . . . . . .

ALL WORK DONE IN ACCORDANCE WITH THE CITY OF SEATTLE STANDARD PLANS AND SPECIFICATIONS AND OTHER DOCUMENTS CALLED FOR IN SECTION 0-02.3 OF THE PROJECT MANUAL.

CATHERINE E. MINKIN
STATE OF WASHINGTON
27900
REGISTERED
PROFESSIONAL ENGINEER

City of Seattle
Seattle Department of Transportation
ORDINANCE NO. 122298 & 12250 APPROVED . . . .
FUND: BRIDGING THE GAP, GENERAL FUND
SCALE: H. V. INSPECTOR'S BOOK . . . . . .

SEATTLE DEPT OF TRANSPORTATION
NEIGHBORHOOD STREET FUND LARGE PROJECTS PEDESTRIAN IMPROVEMENTS
PW# 2008-087

JOB NO.
PC TS4242C
R/W
CO TS4242C
VAULT PLAN NO. #774-551
SHEET 34 OF 39